AGARWAL
TANKS & ALLIED WORKS

LINED PIPES

FITTINGS AND VALVE

Reliable Flow Control for
Corrosive Chemical Applications





PTFE LINED
SPOOL PIPE

PFA LINED
BALL VALVE

LINED BUTTERFLY
VALVE

GEAR OPERATED
BUTTERFLY VALVE

LINED BALL
CHECK VALVE

CORROSION RESISTANT

CHEMICAL COMPATIBLE

HIGH PERFORMANCE

LONG SERVICE LIFE

- Chemical Process Plant Equipments
- PFA Lined Valves
- PTFE Lined Pipes & Fittings

Plot 17, Ranoli GIDC, Ranoli, Vadodara
www.agarwaltanks.com
+91 98980 36666
info@agarwaltanks.com

COMPANY PROFILE

Delivering High Performance PFA / PTFE Lined Solutions for Critical Applications



10 YEARS OF EXPERIENCE

25 NB TO **300** NB PRODUCT RANGE

50+ SKILLED PROFESSIONAL

ADVANCED MANUFACTURING FACILITY

ABOUT US

Agarwal Tanks & Allied Works (PTFE Division) is a trusted manufacturer of high-performance PFA/PTFE lined piping systems, valves, fittings, and engineered flow-control solutions. With advanced manufacturing infrastructure, stringent quality standards, and premium raw materials sourced from globally recognized suppliers, we deliver products designed for superior chemical resistance, durability, and long service life. Serving chemical, pharmaceutical, petrochemical, fertilizer, and process industries, we provide customized solutions that meet international standards and critical application requirements.

SPECIALIZED JOBS

We are India's leading Industrial Fluoropolymer Coating and Sheet Lining Service providing company for tanks, vessels, columns, reactors, pipelines, and process equipment, ensuring superior protection against highly corrosive chemicals, acids, alkalis, and solvents. We do Standard and Anti-Static sheet lining of PTFE, PFA, PVDF, FEP, HDPE, ETFE and PP for the equipments and parts used in API, Bulk Drugs, Pesticides, Fluorine and Bromine Handling, Cryogenics corrosion, Pharmaceuticals, Fine Chemicals, Inorganic Chemicals, Petrochemical, Surface Treatments, Paper Industry, Powder Industry, Steel Industry, Bio-Diesel Industry, Etc.

We also provide Internal Coating service for HALAR (ECTFE), ETFE, PFA, FEP, HDPE and PP Coating for the equipments like Centrifuges, Storage Tanks, Filters, Dryers, Reactors, Mixers, Columns, GLR Spares, Silicon Carbine Shell and Tube Heat Exchangers, Etc.

WHY CHOOSE US

- PFA / PTFE Expertise
- Corrosion Resistant Solutions
- In-House Manufacturing Facility
- Rigorous Quality Assurance
- Customized Engineering Solutions
- Global Supply & Timely Delivery

TRUSTED BY INDUSTRY LEADERS

UPL, GE, GACL, IndianOil, DEEPAK, SRF, SATYESH BRINECHEM PRIVATE LIMITED, RCF, cohizon, ANUPAM RASAYAN INDIA LTD.

* Logos shown are property of respective companies.

DHANRAJ GROUP WHERE GENERATIONS WORK TOGETHER

DHANRAJ GROUP OF COMPANIES (M. I. Agarwal Family)

AGARWAL TANKS & ALLIED WORKS · Agarwal ROADLINES · AL SIDDHI MANUFACTURING W.L.L · AUTOCRAFT · SANJIVANI INDUSTRIES · AGARWAL D. GASSING STATION VADODARA

info@agarwaltanks.com

+91 98980 36666

www.agarwaltanks.com

AGARWAL
TANKS & ALLIED WORKS

LINED SPOOL PIPE



TECHNICAL DRAWING

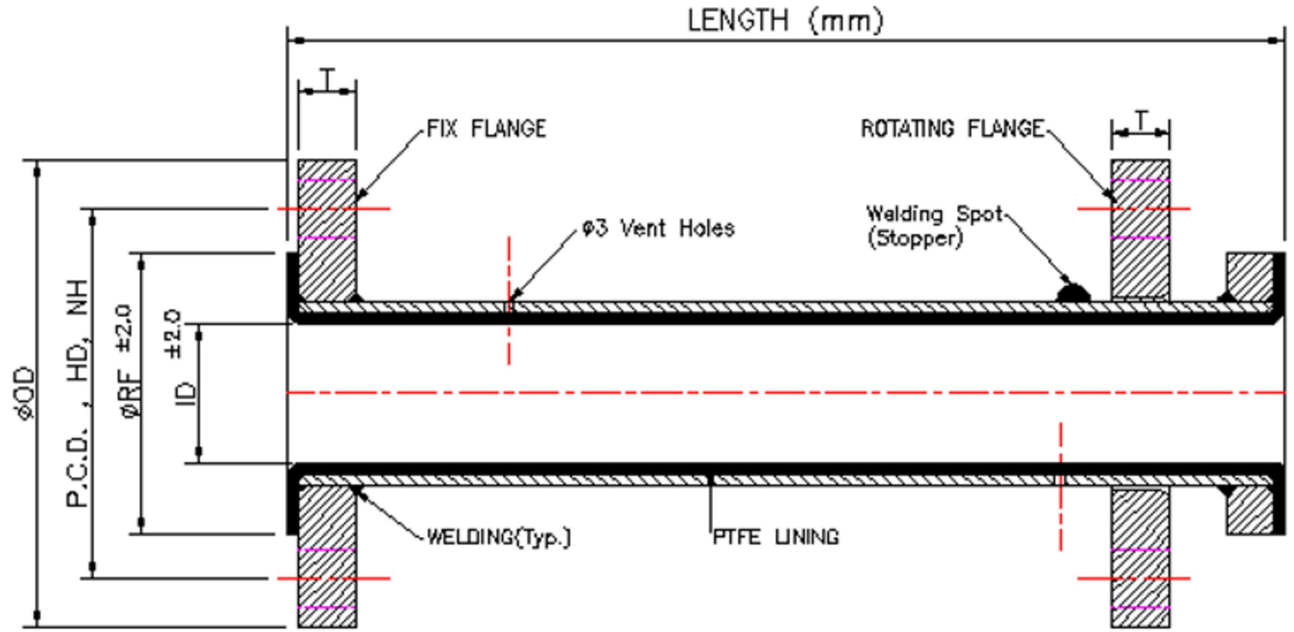

SPECIFICATION

MATERIAL OPTIONS
- Pipe : CS / S.S 304 / S.S 316
- Flange : A105 / IS:2062 / S.S.304 / S.S.316 ASA 150#

LINING MATERIAL OPTIONS
- PTFE Lining : ASTM D 4895 (Pest Extruder Liner Thickness min 3.2 to max 7.5mm)
- Others Lining- PP/ HDPE/ PVDF

TEST & INSPECTION DATA
- Hydrostatic Test –: 29.6 Kg/Cm². After Lining
- Spark Test : 10 K.V D.C After Lining

DIMENSIONAL TABLE

SIZE (NB)	OD	ID	T	R/F	P.C.D	HOLES HD	NO. OF HOLE NH
25	108	20	14.3	51	79.4	16	4
40	127	34	17.5	73	98.4	16	4
50	152.4	44	19	92	120.6	19	4
80	190.5	70	23.8	127	152.4	19	4
100	228.6	93	23.8	157	190.5	19	8
150	279.4	143	25.4	216	241.3	22.2	8
200	342.9	193	28.4	270	298.5	22.2	8
250	406.4	247	30.2	324	362	25.4	12
300	482.6	298	31.8	381	341.8	25.4	12

* STANDARD MAXIMUM LENGTH IS 3000 MM, LONGER LENGTH CAN BE SUPPLIED ON REQUEST. *

AGARWAL
TANKS & ALLIED WORKS

LINING ELBOW



SPECIFICATION

MATERIAL OPTIONS
- Bend : ASTM A234 Gr.WPB /S.S 304 / S.S 316
- Flange : A105 / IS:2062 / S.S.304 / S.S 3016 /ASA 150#

LINING MATERIAL
- PTFE Lining : ASTM D 4895 (Pest Extruder Liner Thickness min 3.2 to max 7.5mm)
- Others Lining- PP/ HDPE/ PVDF

TEST & INSPECTION DATA
- Hydrostatic Test –: 29.6 Kg/Cm². After Lining
- Spark Test : 10 K.V D.C After Lining

* NON STANDARD DEGREE BAND ALSO AVAILABLE ON REQUEST. *

TECHNICAL DRAWING

90DEG

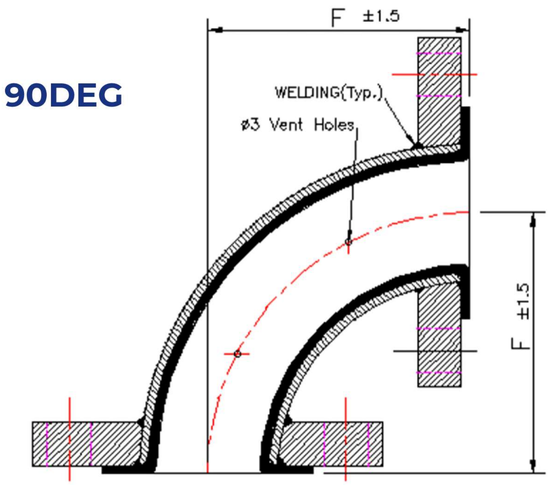

45DEG

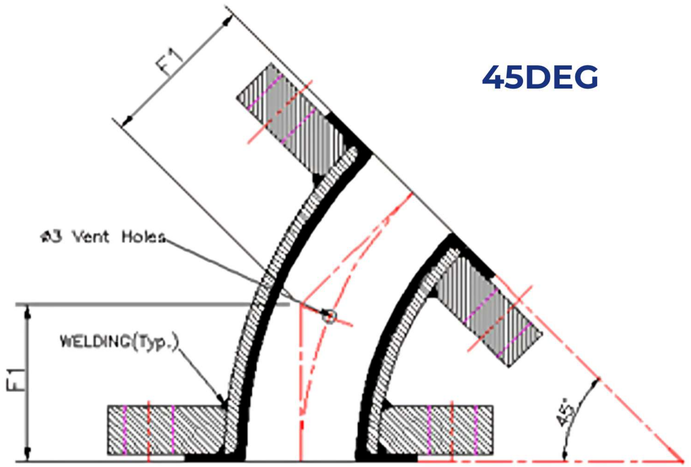

DIMENSIONAL TABLE

90DEG			45DEG	
SIZE (NB)	F (MM)		SIZE (NB)	F1 (MM)
25	89		25	44
40	102		40	57
50	114		50	64
80	140		80	76
100	165		100	102
150	203		150	127
200	229		200	140
250	279		250	165
300	305		300	190

AGARWAL
TANKS & ALLIED WORKS

LINED EQUAL TEE

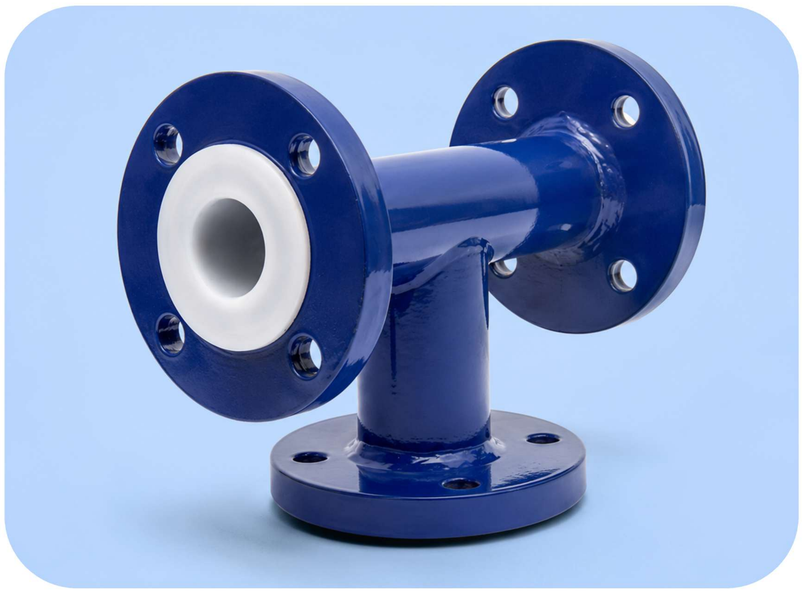

TECHNICAL DRAWING

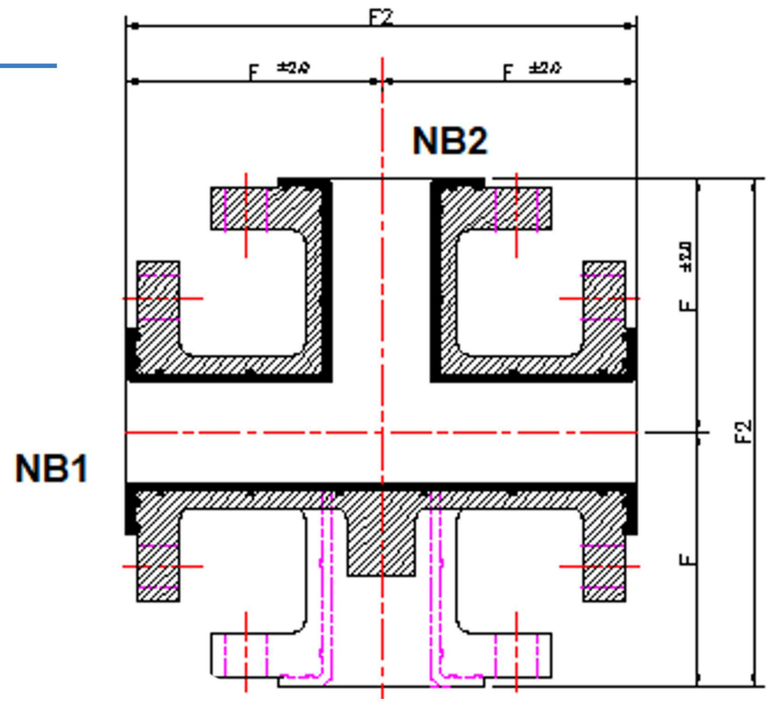

DIMENSIONAL TABLE

EQ.TEE / RED. TEE			
SIZE (NB1)	SIZE (NB2)	F (MM)	F2 (MM)
25	15/20/25	89	178
40	15/20/25/40	102	204
50	15/20/25/40/50	114	228
80	20/25/40/50/80	140	280
100	25/40/50/80/100	165	330
150	25/40/50/80/100	203	406
200	25/40/50/80/100/150/200	229	458
250	25/40/50/80/100/150/200/250	279	558
300	25/40/50/80/100/150/200/250/300	305	610

SPECIFICATION

MATERIAL OPTIONS
- Pipe : CS / S.S 304 / S.S 316
- Flange : A105 / IS:2062 / S.S.304 / S.S.316 ASA 150#

LINING MATERIAL
- PFA Lining : ASTM D 3307
  (Liner Thickness min 3.2 to max 7.5mm
- Others Lining- FEP / PP / HDPE / PVDF

TEST & INSPECTION DATA
- Hydrostatic Test –: 29.6 Kg/Cm². After Lining
- Spark Test : 10 K.V D.C After Lining

* NON STANDARD FLANGE OPTIONS AVAILABLE ON REQUEST. *

AGARWAL
TANKS & ALLIED WORKS

LINED INSTRUMENT TEE



TECHNICAL DRAWING

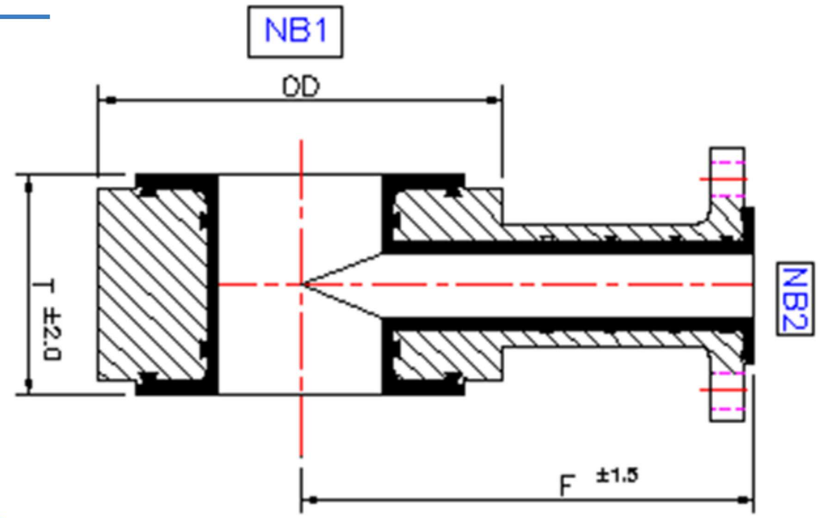

DIMENSIONAL TABLE

SIZE		OD	F	T
NB1	NB2	(MM)	(MM)	(MM)
25	25	60	89	50
40	25	80	102	50
	40			75
50	25	98	114	50
	40			75
	50			85
80	25	133	140	50
	40			75
	50			85
100	25	162	165	50
	40			75
	50			85
150	25	219	203	50
	40			75
	50			85
200	25	275	229	50
	40			75
	50			85
250	25	330	279	50
	40			75
	50			85
300	25	390	305	50
	40			75
	50			85

SPECIFICATION

MATERIAL OPTIONS

·Pipe : CS / S.S 304 / S.S 316
·Flange : A105 / IS:2062 / S.S.304 / S.S.316 ASA 150#

LINING MATERIAL

·PFA Lining : ASTM D 3307
(Liner Thickness min 3.2 to max 7.5mm
·Others Lining- FEP / PP / HDPE / PVDF

TEST & INSPECTION DATA

·Hydrostatic Test –: 29.6 Kg/Cm². After Lining
·Spark Test : 10 K.V D.C After Lining

* NON STANDARD FLANGE OPTIONS AVAILABLE ON REQUEST. *

AGARWAL
TANKS & ALLIED WORKS

LINED CON./ECC REDUCER / RED. FLANGE



TECHNICAL DRAWING

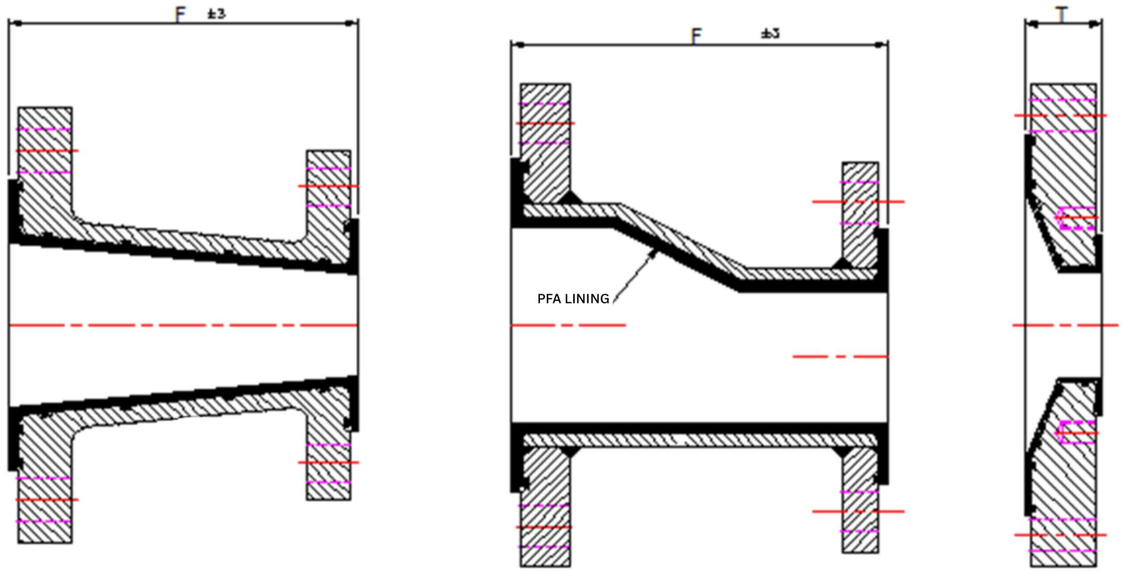

SPECIFICATION

MATERIAL OPTIONS

·CR.Body : ASTM A234 Gr.WPB / S.S 304 / S.S 316
·Flange : A105 / IS:2062 / S.S.304 / S.S.316 ASA 150#

LINING MATERIAL

·PFA Lining : ASTM D 3307
(Liner Thickness min 3.2 to max 7.5mm
·Others Lining- FEP / PP/ HDPE / PVDF

TEST & INSPECTION DATA

·Hydrostatic Test –: 29.6 Kg/Cm². After Lining
·Spark Test : 10 K.V D.C After Lining

DIMENSIONAL TABLE

SIZE (NB1)	SIZE (NB2)	F	T
		(MM)	(MM)
25	15/20	114	35
40	15/20/25	114	35
50	15/20/25/40	127	35
80	20/25/40/50	152	45
100	25/40/50/80	178	45
150	25/40/50/80/100	229	54
200	25/40/50/80/100/150	279	54
250	25/40/50/80/100/150/200	305	54
300	25/40/50/80/100/150/200/250	356	54

* NON STANDARD FLANGE OPTIONS AVAILABLE ON REQUEST. *

AGARWAL
TANKS & ALLIED WORKS

LINED SIGHT FLOW INDICATOR



SPECIFICATION

MATERIAL OPTIONS
·Body: CS / S.S 304 / S.S 316
·Flange : A105 / IS:2062 / S.S.304 / S.S.316 ASA 150#

LINING MATERIAL
·PFA Lining : ASTM D 3307
(Liner Thickness min 3.2 to max 5.5mm
·Others Lining- FEP / PP/ HDPE / PVDF

TEST & INSPECTION DATA
·Hydrostatic Test –: 10Kg/Cm². After Lining
·Spark Test : 10 K.V D.C After Lining

TECHNICAL DRAWING

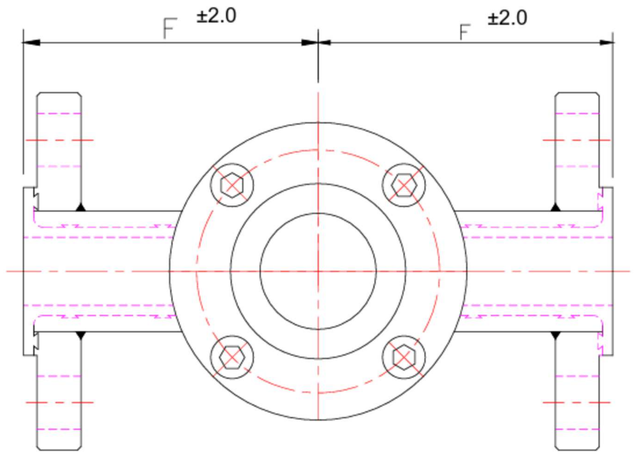

TOP VIEW

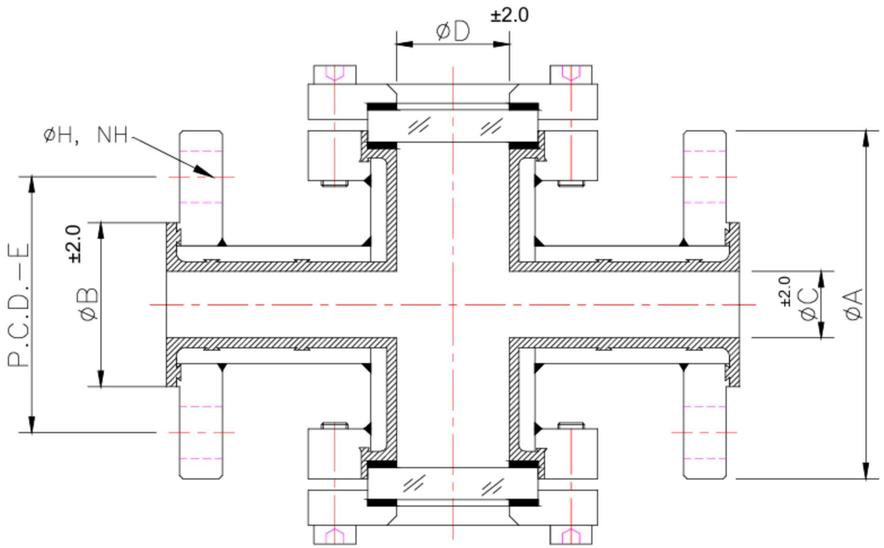

DIMENSIONAL TABLE

SIZE (NB)	ØA	ØB	ØC	ØD	T	P.C.D-e	HOLES ØH	NO. OF HOLE NH	F (MM)
25	108	51	20	34	14.3	79.4	16	4	89
40	127	73	34	44	17.5	98.4	16	4	102
50	152.4	92	44	55	19	120.6	19	4	114
80	190.5	127	70	70	23.8	152.4	19	4	140
100	228.6	157	92	93	23.8	190.5	19	8	165
150	279.4	216	143	143	25.4	241.3	22.2	8	203

AGARWAL
TANKS & ALLIED WORKS

FULL VIEW SIDE GLASS



TECHNICAL DRAWING

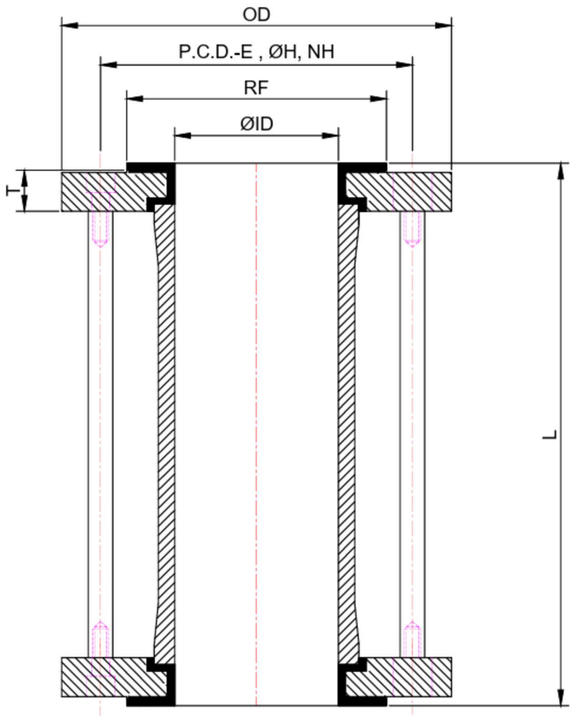

SPECIFICATION

MATERIAL OPTIONS

·Tube : Borosilicate Glass Tube
·Flange : A105 / IS:2062 / S.S.304 / S.S.316 ASA 150#

LINING MATERIAL

·PFA Lining : ASTM D 3307
(Liner Thickness min 3.2 to max 5.0mm
·Others Lining- FEP / PP/ HDPE / PVDF

TEST & INSPECTION DATA

·Hydrostatic Test–: 10Kg/Cm². After Lining
·Spark Test : 10 K.V D.C After Lining

DIMENSIONAL TABLE

SIZE (NB)	Lining Thk.	OD	RF	ID	T	P.C.D-e	HOLES ØH	NH	L
25	3.2	108	51	25	14	79.4	16	4	180
40	3.2	127	73	40	16	98.4	16	4	180
50	3.5	152.4	92	50	19	120.6	19	4	190
80	4	190.5	127	80	23.8	152.4	19	4	190
100	4.5	228.6	157	100	23.8	190.5	19	8	190

AGARWAL
TANKS & ALLIED WORKS

LINED BLIND FLANGE



SPECIFICATION

MATERIAL OPTIONS

·Flange : A105 / IS:2062 / S.S.304 / S.S.316 ASA 150#

LINING MATERIAL

·PFA Lining : ASTM D 3307
(Liner Thickness min 3.2 to max 7.5mm
·Others Lining- FEP / PP/ HDPE / PVDF

TEST & INSPECTION DATA

·Hydrostatic Test –: 10Kg/Cm². After Lining
·Spark Test : 10 K.V D.C After Lining

TECHNICAL DRAWING

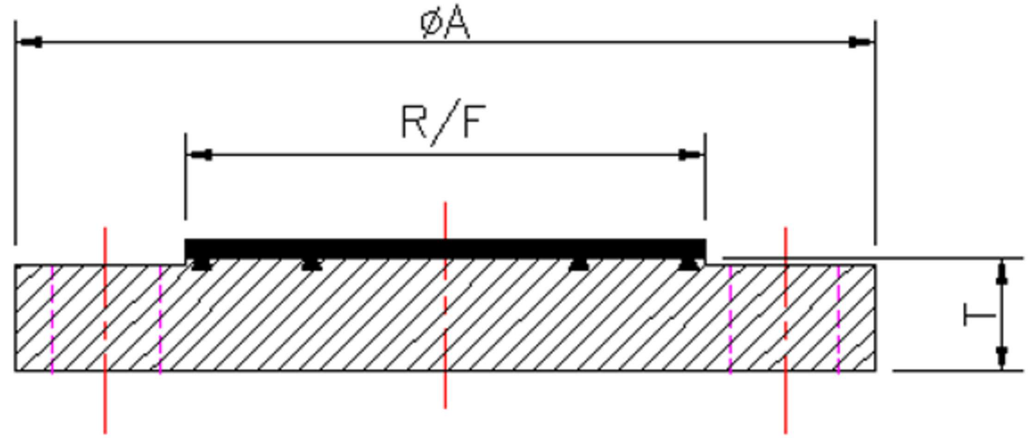

DIMENSIONAL TABLE

NOMINAL BORE NB	Lining THICKNESS	FLANGE OD ØA	RAISED FACE DIA (R/F)	THICKNESS (T)
25	3	108	51	14.3
40	3	127	73	17.5
50	3.5	152.4	92	19
80	4	190.5	127	23.8
100	4.5	228.6	157	23.8
150	5	279.4	216	25.4
200	5	342.9	270	28.6
250	5.5	406.4	324	30.2
300	5.5	482.6	381	31.7

AGARWAL
TANKS & ALLIED WORKS

PTFE BELLOW



TECHNICAL DRAWING

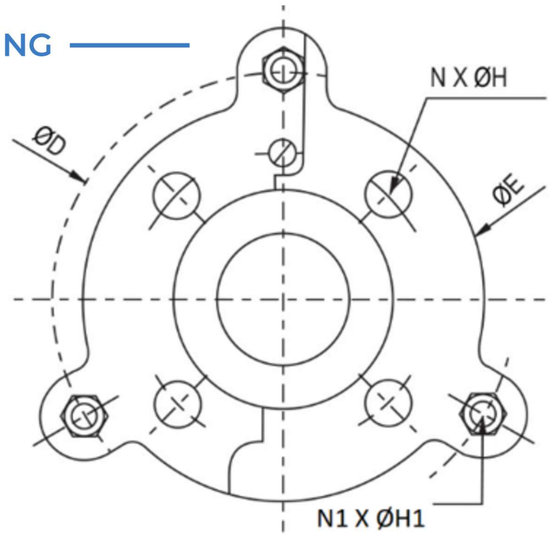

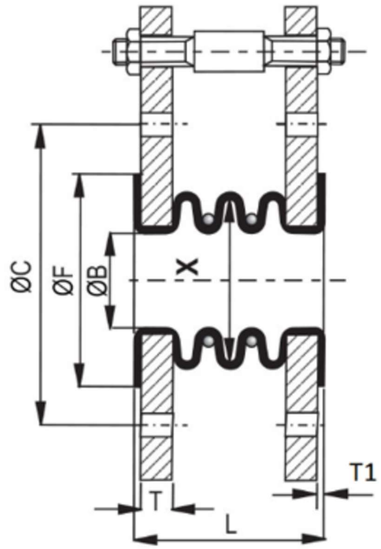

DIMENSIONAL TABLE

NOMINAL SIZE (MM)	ØB (MM)	X (MM)	C (MM)	ØD (MM)	ØE (MM)	ØF (MM)	L (MM)	T (MM)	T1 (MM)	N X ØH (MM)	N1 X ØH1 (MM)
50	58	84	120.6	180	152.4	92	70	12	3	4 x 18	3 x 12
65	73	103	139.7	205	177.8	105	80	12	3	4 x 18	3 x 12
80	90	116	152.4	218	190.5	127	100	12	4	4 x 18	3 x 12
100	110	154	190.5	256	228.6	157	100	14	4	8 x 19	3 x 12
150	160	197	241.3	313	279.4	216	100	16	4	8 x 22	3 x 14
200	210	240	298.4	376	342.9	270	150	16	4	8 x 22	3 x 14
250	262	310	361.9	445	406.4	324	150	20	5	12 x 25	3 x 14
300	310	380	431.8	521	482.6	381	150	20	5	12 x 25	3 x 14

SPECIFICATION

MATERIAL OPTIONS

·Flange : A105 / IS:2062 / S.S.304 / S.S.316
ASA 150#

LINING MATERIAL

·PTFE Bellow : ASTM D 4895
(Liner Thickness min 3.2 to max 7.5mm

TEST & INSPECTION DATA

·Hydrostatic Test –: 6Kg/Cm². After Lining
·Spark Test : 10 K.V D.C After Lining

AGARWAL
TANKS & ALLIED WORKS

LINED CENTER SPLIT BALL VALVE



TECHNICAL DRAWING

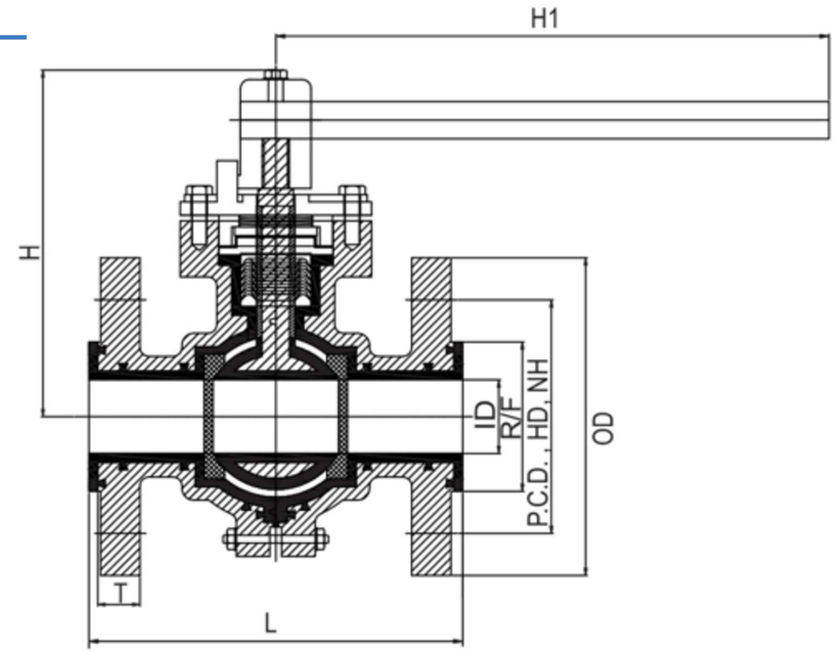

SPECIFICATION

MATERIAL OPTIONS
- Body : SG / WCB / S.S 304 / S.S 316
- Ball : WCB / S.S.304 / S.S.316

LINING MATERIAL
- PFA Lining : ASTM D 3307
(Liner Thickness min 3.2 to max 5.5mm
- Others Lining- FEP / PP/ HDPE / PVDF

TEST & INSPECTION DATA
- Hydrostatic Test –: 15Kg/Cm². (BODY TEST)
- Spark Test : 10 K.V D.C After Lining

DIMENSIONAL TABLE

VALVE SIZE (MM)	L	H	H1	T	OD	ID	R/F	P.C.D	HOLES DIA HD	NO. OF HOLE NH
25	127	120	200	14.3	108	25	51	79.4	16	4
40	165	135	250	17.5	127	40	73	98.4	16	4
50	178	155	300	19	152.4	50	92	120.6	19	4
80	203	208	350	23.8	190.5	75	127	152.4	19	4
100	229	230	450	23.8	228.6	95	157	190.5	19	8
150	267	260	550	25.4	279.4	145	216	241.3	22.2	8

AGARWAL
TANKS & ALLIED WORKS

LINED BALL CHECK VALVE



TECHNICAL DRAWING

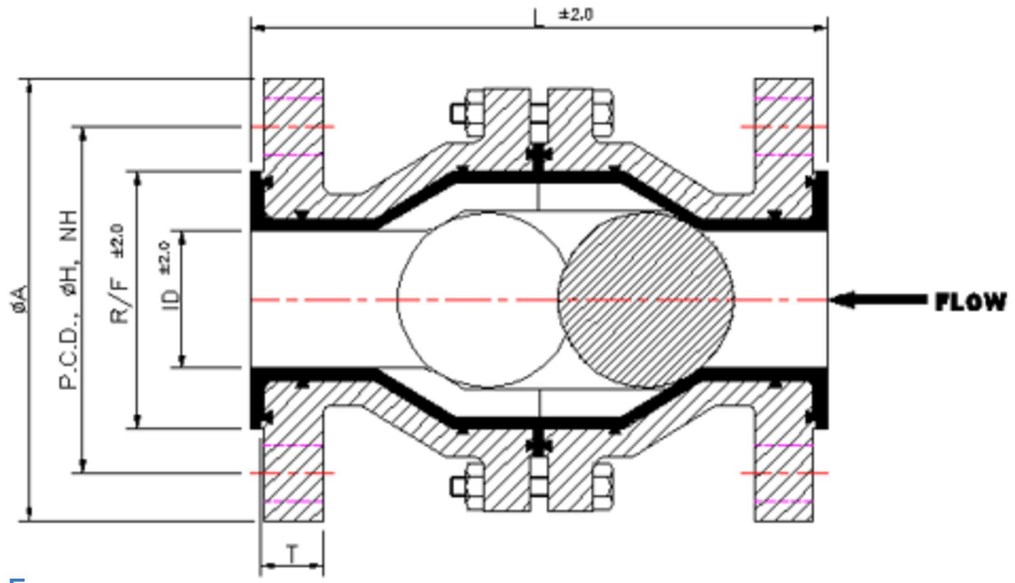

DIMENSIONAL TABLE

VALVE SIZE (MM)	L	T	ØA	ID	R/F	P.C.D	HOLES ØH	NO. OF HOLE- NH
25	127	14.3	108	25	51	79.4	16	4
40	165	17.5	127	40	73	98.4	16	4
50	178	19	152.4	50	92	120.6	19	4
80	203	23.8	190.5	75	127	152.4	19	4
100	229	23.8	228.6	95	157	190.5	19	8
150	267	25.4	279.4	145	216	241.3	22.2	8

SPECIFICATION

MATERIAL OPTIONS
- Body : SG / WCB / S.S 304 / S.S 316
- Ball : SOLID PTFE

LINING MATERIAL
- PFA Lining : ASTM D 3307
  (Liner Thickness min 3.2 to max 5.5mm
- Others Lining- FEP

TEST & INSPECTION DATA
- Hydrostatic Test –: 10Kg/Cm². (BODY TEST)
- Spark Test : 10 K.V D.C After Lining

LINED BUTTERFLY VALVE



SPECIFICATION

MATERIAL OPTIONS
- Body : SG / WCB / S.S 304 / S.S 316
- Disc : WCB / S.S 304 / S.S 316

LINING MATERIAL
- PFA Lining : ASTM D 3307
  (Liner Thickness min 3.5 to max 6.5mm
- Others Lining- FEP

TEST & INSPECTION DATA
- Hydrostatic Test –: 10Kg/Cm². After Lining
- Spark Test : 10 K.V D.C After Lining

TECHNICAL DRAWING

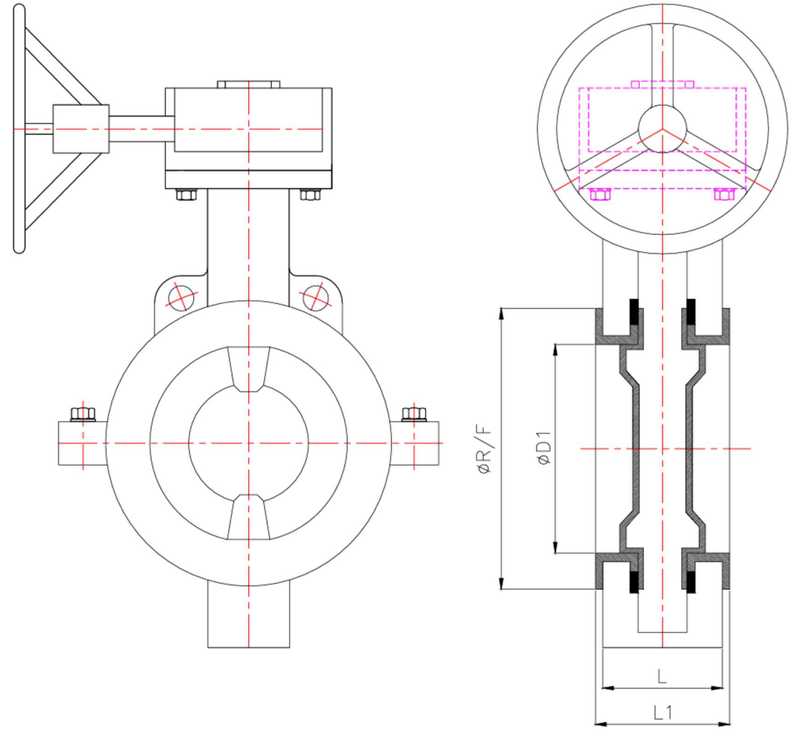

DIMENSIONAL TABLE

Size (NB)	L1 ± 3	L ± 1	D1 ± 2	R/F ± 2
50 mm	50	43	50	93
65 mm	53	46	65	106
80 mm	53	46	75	128
100 mm	61	52	100	158
150mm	64	56	150	216
200mm	70	60	200	270
250mm	80	68	250	323

AGARWAL
TANKS & ALLIED WORKS

PTFE LINED DIP PIPE



SPECIFICATION

MATERIAL OPTIONS

- Pipe : CS / S.S 304 / S.S 316
- Flange : IS.2062 / A 105 / S.S 304 / S.S 316

LINING MATERIAL

- PTFE Lining : ASTM D 4895
  (Liner Thickness min 3.5 to max 6.5mm)

TEST & INSPECTION DATA

- Hydrostatic Test –: 10Kg/Cm². After Lining
- Spark Test : 10 K.V D.C After Lining

TECHNICAL DRAWING

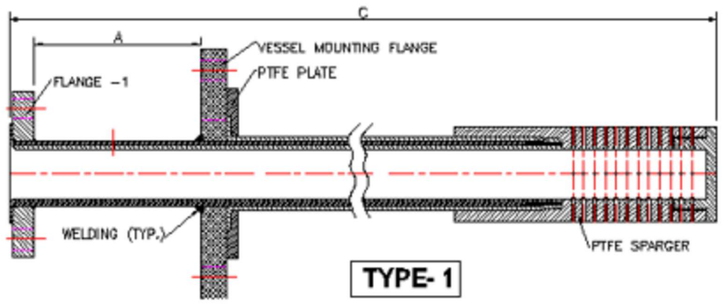

TYPE- 1

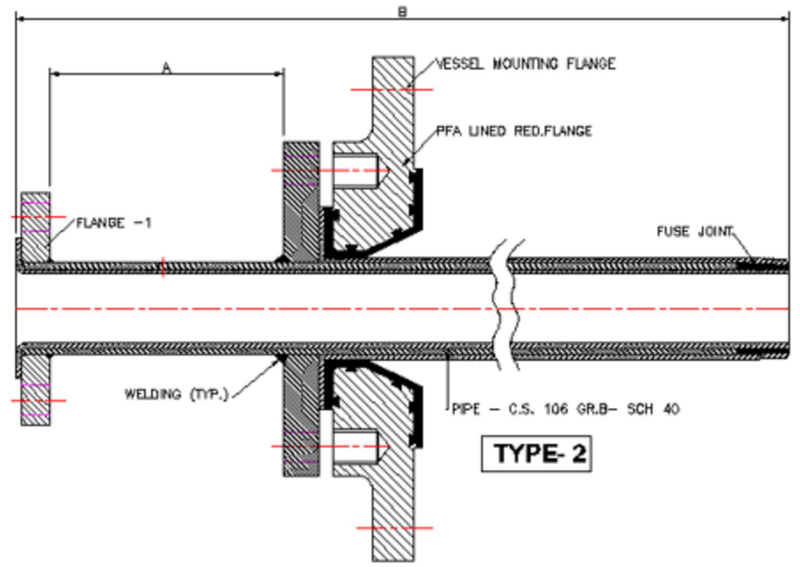

TYPE- 2

DIMENSIONAL TABLE

SIZE (NB)	FLANGE – 1	VESSEL MOUNTING FLANGE	A	B & C (MAX.)	SCH
25	25	50/80/100/150/200	100	3000	40
40	40	65/80/100/150/200	100	3000	40
50	50	80/100/150/200	100	3000	40
80	80	100/150/200	100	3000	40
100	100	150/200	100	3000	40

AGARWAL
TANKS & ALLIED WORKS

EQUIPMENT & COMPONENTS



ON LINE SAMPLING VALVE



PRO VENT SPOOL PIPE



PURE PTFE SPACER



PTFE LINED SPACER



LINED HOSE PIPE



LINED SPECTACLE BLIND



PTFE LINER



PTFE GASKET



PTFE BUSH AND ROD

AGARWAL
TANKS & ALLIED WORKS

ATAW PROVENT PLUG

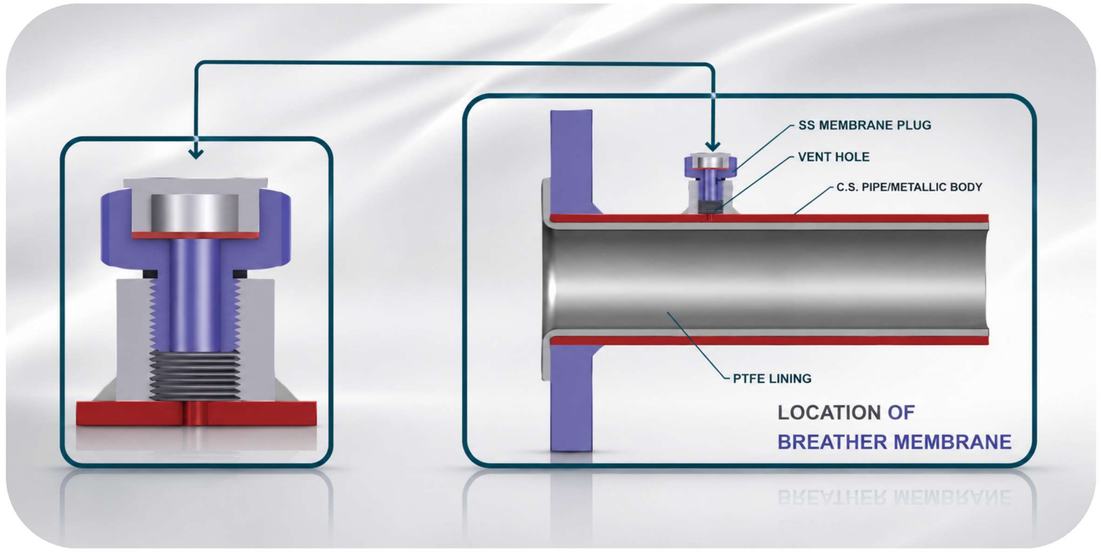

Fluoro polymers are highly resistant materials that can endure extreme temperatures. These characteristics make them perfect for use as coatings or linings to safeguard metals against corrosion. Its crucial to note that fluoro polymers linings are applied in extremely challenging environments, where the issue of permeation becomes a key factor in determining their effectiveness.

Permeation describes the transfer of gases and vapors in barrier materials such as polymeric plastics.

What is permeation ?

Permeation is a three-stage process involving, in sequence:
- Absorption: fluid is absorbed by the liner
- Diffusion: fluid moves through the liner
- Desorption: fluid evaporates upon reaching the opposite surface of the liner

How to control permeation with ATAW PROVENT

- Proper PTFE resin formulation.
- Prevent moisture infiltration and allow gases to exit through a vent.
- This is managed with ATAW's PROVENT System

ATAW's PTFE Liner and **PROVENT System** are engineered to minimise permeation by using an advance venting solution that prevents blockages and corrosion at the vent point.

Understanding Fluoropolymer permeation to gasp how molecules permeate through fluoropolymer, its essential to know the chemical structure of PTFE and PFA. These materials consist of long carbon atom chains surrounded by fluorine atoms. While the carbon-carbon bond is robust, the carbon-fluorine bond is one of the strongest in chemistry, granting these materials excellent resistance to corrosion.

However, elements similar to fluorine, like chlorine and bromine, can penetrate the surface of PTFE and PFA. To counter this, a vent hole is provided between the liner and pipe to relieve the pressure. Without proper management, these gases can mix with moisture to form corrosive acids, leading to damage.

ATAW's PROVENT Solution is designed to prevent moisture from entering the space between the pipe and liner while still allowing gases to escape.

This system maintains pressure balance, reducing permeation and protecting against potential corrosion.



AGARWAL
TANKS & ALLIED WORKS

PTFE LINED STATIC MIXER

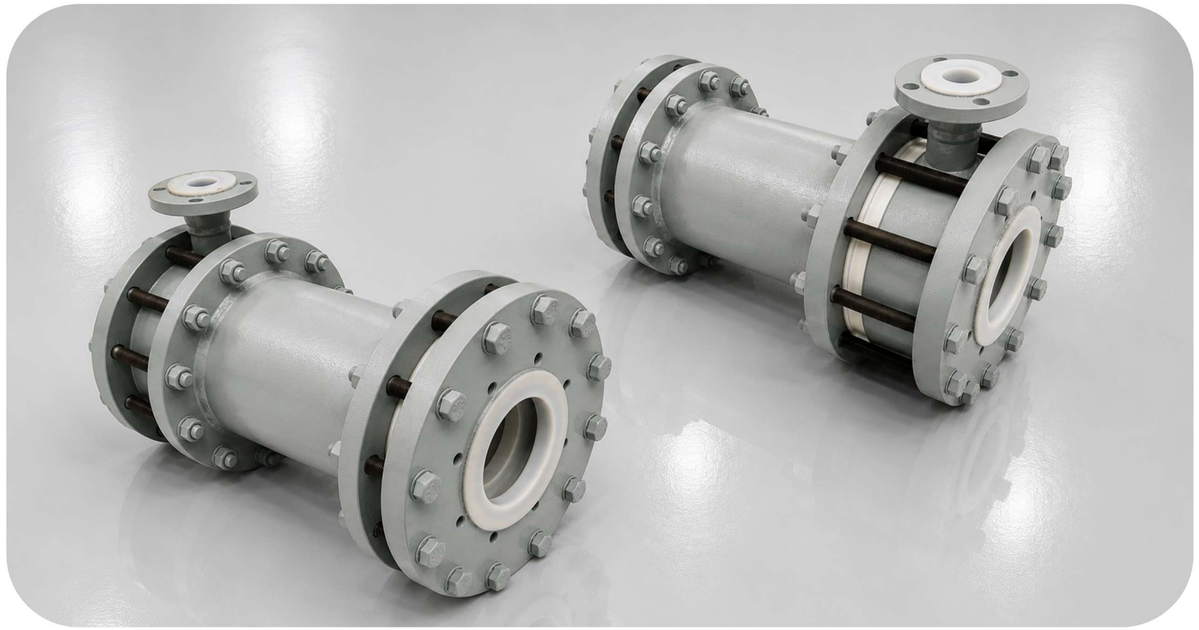

PTFE Lined Static Mixers are designed for continuous inline mixing of corrosive chemicals, acids, alkalis, solvents, and process fluids. The mixer consists of a carbon steel shell internally lined with PTFE and fitted with specially designed Glass Filled PTFE mixing elements that provide efficient mixing without moving parts.

PTFE Lined Static Mixer with Glass Filled PTFE Mixing Rings is engineered for efficient inline mixing of highly corrosive process fluids. The combination of PTFE lining and Glass Filled PTFE mixing elements ensures superior chemical resistance, excellent mixing performance, and maintenance-free operation in demanding industrial applications.

Working Principle

A Static Mixer is an inline mixing device with no **moving parts.**

Process Flow

- Two or more liquids enter the static mixer through the inlet nozzle.
- The flow passes through specially designed **Glass Filled PTFE Mixing Rings/Elements.**
- These elements continuously divide, rotate, and recombine the fluid streams.
- Homogeneous mixing is achieved as the fluid travels through the mixer.
- Fully mixed fluid exits through the outlet nozzle.

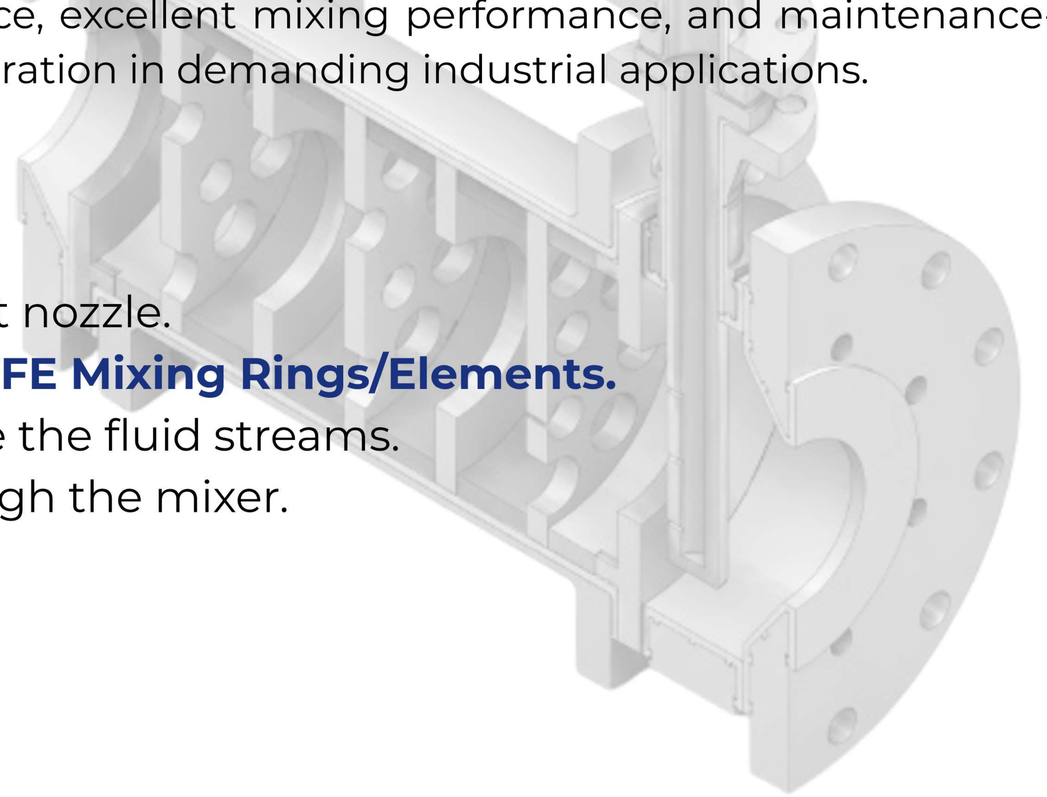

AGARWAL
TANKS & ALLIED WORKS

SHEET LINING

With over 30 years of industry expertise, we provide world-class PTFE Sheet Lining, Halar (ECTFE) Coating, and ETFE Coating solutions for highly corrosive process environments. All fabrication and lining activities are performed entirely in-house by our experienced team, ensuring strict quality control, precision workmanship, and consistent performance.

Our advanced lining and fabrication systems offer exceptional resistance to aggressive chemicals, high temperatures, abrasion, and corrosion, significantly extending equipment life and reducing maintenance costs. Backed by modern manufacturing facilities, skilled applicators, and stringent inspection procedures, we deliver export-quality solutions that meet the demanding requirements of the chemical, pharmaceutical, fertilizer, petrochemical, and process industries.

From vessels, tanks, columns, and piping systems to custom-fabricated equipment, our commitment to quality, reliability, and customer satisfaction has made us a trusted partner for corrosion-resistant solutions worldwide.





CERTIFIED ISO 9001:2015 COMPANY

CERTIFIED ISO 14001:2015 COMPANY

CERTIFIED ISO 45001:2018 COMPANY

EIL

ATAW

AGARWAL

TANKS & ALLIED WORKS

+91 98980 36666 | Plot 17, Ranoli GIDC, Ranoli, Vadodara, Gujarat 391350 | www.agarwaltanks.com