ATAW
AGARWAL
TANKS & ALLIED WORKS

ENGINEERING
AND MANUFACTURING DIVISION

WE BUILT INDUSTRIES

- EPC CONTRACTORS
- PRESSURE VESEEL
- HEAT EXCHANGER
- REACTOR
- STORAGE TANK
- MOBILE TANK
- DISTILLATION COLUMN

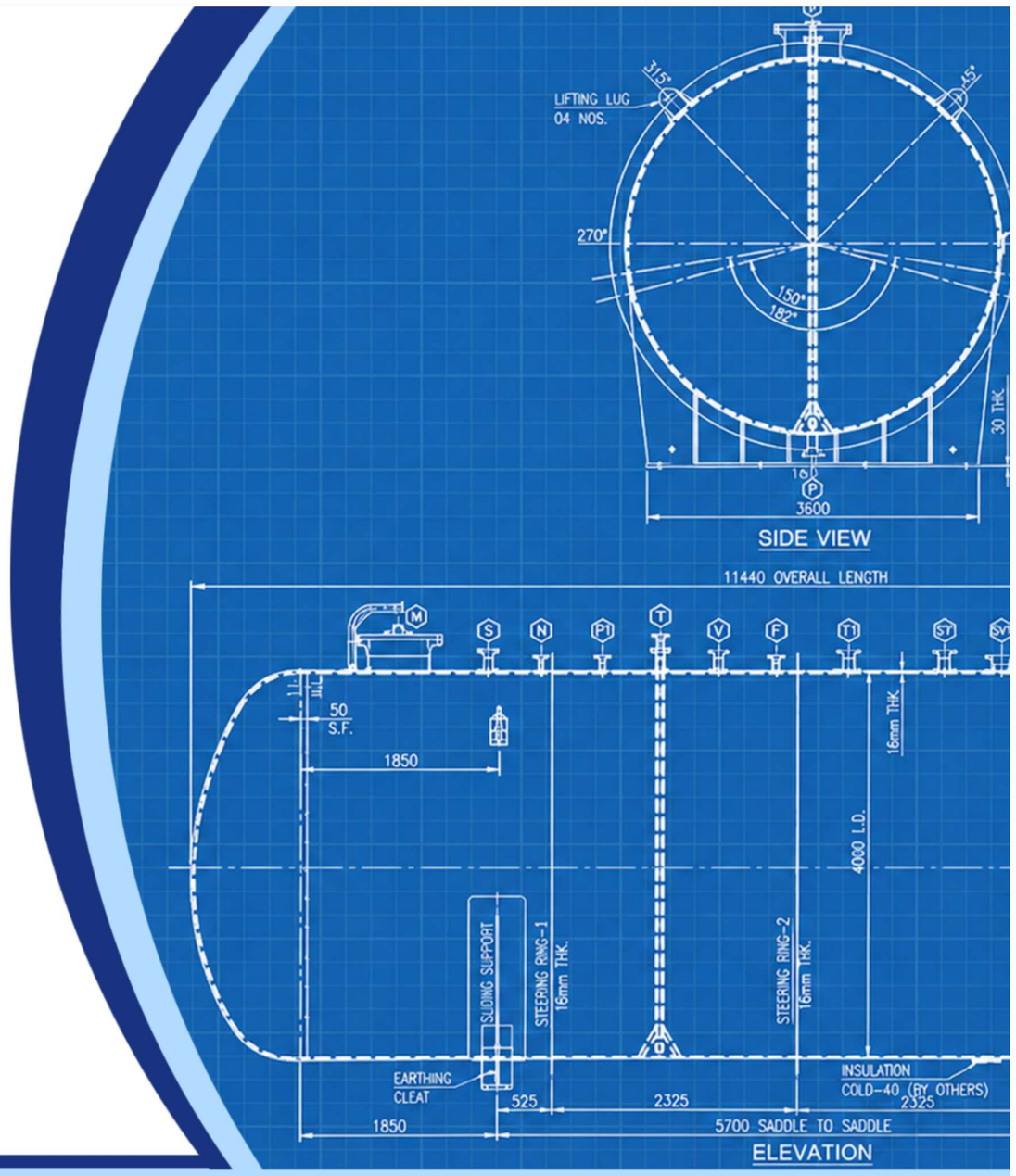

PESO LIAISONING

DESIGN AND ENGINEERING

STRUCURAL FABRICATION

MODULAR FABRICATION



FABRICATION CAPABILITIES

Our fabrication plant has a combined annual steel fabrication capacity of 2000 MT.
We are situated on an arterial highway with a combined area of footprint of 4500 Sq. Mtr workshop area and 20,000 Sq. Mtr of open area for fabrication over three different sheds.
We are close to major Indian Ports and have shipped oversized shop fabrication equipment in single pieces.
We enjoy excellent connectivity to key Indian ports, enabling efficient shipment logistics.
Our team has successfully delivered oversized (up to 5500 mm Ø) shop-fabricated equipment in single pieces, demonstrating our capability to manage heavy and over-dimensional loads.
With comprehensive logistical support and industry expertise, we are well positioned to deliver seamless execution from fabrication through to delivery.

2000 MT
Annual Sheet Fabrication Capacity

4500 Sq. Mtr
Workshop Area

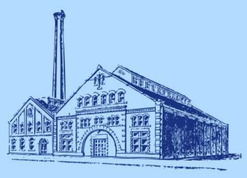

20,000Sq. Mtr
Open Fabrication Area

INFRASTRUCTURE AND FACILITIES

In-house Design & Manufacturing
Fully in-house design and manufacturing capabilities, supported by qualified engineers.

InCovered Shed Area
Covered shared area of 4500m² and total plant area of 20000m² spreaded over 3 different locations

Hydrostatic Testing Facility
Dedicated in-house hydrostatic testing facility.

Blasting & Painting Facility
Comprehensive in-house blasting and painting facility.

Plate Rolling Machine
Precision plate rolling machine for forming curved members.

Plate Bending Machine
Plate bending machine for accurate structural shaping.

Air Plasma Cutting System
High-precision cutting operations.

Tube Expanding Equipment
Tube fitting and joint preparation equipment.

Advanced Welding Equipment
Including SAW, TIG, MIG and ARC welding units.

Testing Instruments
Wide range of testing instruments including:
- RT
- UT
- DPT
- Stress Relieving Setup

Fabrication Machinery
Including:
- Lathe Machine
- Drill Machine
- Radial Drill
- Gas Cutting Machine
- Welding Rotator

Inspection Tools
Including:
- Digital Coating Thickness Gauge
- Digital IR Thermometer
- Vernier Calipers
- Pressure Gauges
- Tong Tester
- Micrometer
- Fillet/Weld Gauge
- Spark Tester
- Digital Thickness Gauges

PESO APPROVED UNIT

Agarwal Tanks and Allied works is a Govt. approved and licensed by Petroleum and Explosives Safety Organization (PESO) for manufacturing of Pressure Vessel and Process Equipments.

Our product range includes export quality Heat exchangers, Processing Reactors, Storage tanks, Receivers, Columns, Skids, PHE and various process equipment. Our proactive approach to technical issues enables customers to understand important cost-effective solutions in Design Fabrication and Production Engineering.

We are proud to be licensed under **PESO for manufacturing of Pressure vessels under SMPV rules 2016 and Petroleum rules 2002.**
We have manufactured the following pressure vessels under SMPV Rules.

Static: Chlorine storage tank, Isobutylene tank, EO storage tank, DMA storage tank, Ammonia storage tank, LPG storage Tank, Freon R-22 storage tank, Propylene storage tank, AHF Storage tank, AHCL, PO Storage Tanks, Mounted Propylene Storage Tank, etc.
Mobile: LPG road tanker, propane road tanker, propylene road tanker, Ammonia road tanker, etc..

We have manufactured the following Tanks under Petroleum Rules.
Methanol storage tank, Benzene tank, Formaldehyde storage tank, HSD Storage tank, Fresh Xylene storage tank, Petroleum storage tank, Toluene storage tank, etc.

We are also providing licensing services under PESO.

- Prior Approval, Final Approval, Local NOC, and Endorsement of Licence.
- Form 126-Certificate of tank testing at site.
- Form 130-Safety certificate of tank.
- Form 13 (2)-Certificate of control (COC) of tank.
- Form 18-Safety valves testing certificate of tank.
- Form 19-Hydro test certificate of tank.
- Form 33-Safety certificate of tank at site.
- Form 43-Safety certificate of mobile tank.
- Form 9--PESO License.

OUR VALUABLE CLIENTS

PRESSURE VESSELS



CHLORINE

Gujarat Alkalies and Chemicals Limited
Capacity- 100MT, MOC- CS OD-2800, L-16700, THK- 22/28mm



MIBK VESSEL

Deepak Chem Tech Ltd
Capacity- 50KL, MOC- SS OD- 2800, L- 10,000, THK- 14/16mm



METHANOL REACTOR

Gujarat Alkalies and Chemicals Limited
Capacity- 50mt, MOC- CS OD- 3400, L- 9000, THK- 16/22mm



PROPYLENE

Shiva Engineering / IOCL

Capacity- 10mt, MOC- SS 304 OD- 1800, L- 6000, THK- 10mm



ISOBUTYLENE

Tagros Chemical India Ltd.

Capacity- 20MT, MOC- CS OD- 2350, L - 5100, THK -16mm



ANHYDROUS HYDROGEN FLORIDE

Deepak Chem Tech Limited

Capacity- 40MT, MOC- CS OD- 2860, L- 7200, THK-16mm



XYLENE

Cohizon Life Sciences Limited

Capacity- 30MT, MOC- SS 316 OD- 2600, L- 6500, THK- 10/12mm



AMMONIA

Deepak Nitrite Limited, Vadodara

Capacity- 40MT, MOC - CS OD - 3270, L - 6900, THK - 25mm



H2SO4 SEPERATOR

Gujarat Alkalies and Chemicals Limited
Capacity- 1.6MT, MOC- CS OD- 980, L- 2600, THK-10mm



CARBON DISULPHITE

Tagros Chemical India Ltd.
Capacity- 25MT, MOC- CS OD-2350, L- 6100, THK- 16mm



RECEIVER

Advance Petrochemical Pvt. ltd.
Capacity- 15MT, MOC - SS316 OD - 2000, L - 4100, THK - 10mm



RECEIVER

Ather Speciality Chemical Pvt. Ltd.
Capacity- 6KL, MOC- SS316 OD- 1800, L- 3500, THK-12mm

DISTILLATION COLUMN & CHIMNEY



C4 ABSORBER

Deepak Nitrite Limited

MOC- SS304 + MS OD- 4000, L- 32000, THK- 12/18mm



AMMONIA DISTILLATION

Gujarat Alkalies and Chemical Limited

MOC- SS316 OD- 800, L- 15000, THK- 12/14mm



METHANOL RECOVERY

Rajsha Chemicals Limited

MOC- Ss316 OD- 1300, L- 30000, THK- 10mm



BOILER CHIMNEY

Gujarat Alkalies and Chemicals Limited

MOC- CS OD- 1900, L- 30000, THK- 10mm

SPECIALITY EQUIPMENTS



SATURATOR PIT

AL- Shakur LLP

Capacity- 40MT, MOC- CSRL

OD- 3200, L- 5800, THK- 08/10mm

SLUDGE PIT

AL-Shakur LLP

Capacity- 40MT, MOC - CSRL

OD- 4100, L- 6000, THK- 08/10mm





BUFFER PIT

AL-Shakur LLP

Capacity- 40MT, MOC- CSRL

OD- 3100, L- 3200, THK- 08/10mm



DECHLORINATOR

AL-Shakur LLP

Capacity- 40MT, MOC- CS

OD- 2827, L- 1900, THK- 08mm

PILOT PLANT

Kokan Chemicals Pvt. Ltd.

(Skid Mounted Assembly)





PTFE LINED TANK

Indian Oil Corporation Limited

Capacity- 1KL MOC- CS + PTFE

THK- 6 + 3mm

HEAT EXCHANGER



C2 TRAP CONDENSER

Gujarat Alkalies and Chemicals Limited

Pressure- 7.5kg, Tube- 220, MOC- SS

OD-510, L-3500, THK-10mm



BIO GAS HEAT EXCHANGER

Ankur Scientific

Pressure- 6.5kg, Tube- 583, MOC- SS

OD- 1100 , L- 4250 ,THK- 10mm



BIOGAS HEAT EXCHANGER

Ankur Scientific

Pressure- 3.5kg, tube- 430, MOC- CS

OD- 960 , L- 4300 ,THK- 10mm



HYDROGEN COOLER

Al Ghaneen/ Simon India Limited

Pressure- 9kg, tube- 60, MOC- SS+MS

OD- 250Nb Sch 80, L- 5000

REACTORS



24KL REACTOR

IVAX Paper Chemicals

24KL Jacketed with Double mechanical seal

OD- 3300, L- 5600, THK- 14mm MOC- SS304



6KL REACTOR

ADVANCE PETROCHEMICALS

6KL with Jacketed limpet

OD- 1800, L- 3500, 10mm MOC- SS



12KL REACTOR

Advance Petrochemical

12KL with Double mechanical seal and jacketed limpet

OD- 2600, L- 4600, THK- 8mm MOC- SS







REACTOR INTERNAL ASSEMBLY

STORAGE TANKS



HYDROGEN PEROXIDE
Gujarat Alkalies and Chemicals Limited
Capacity- 120KL, MOC- SS316 OD-5100,
L-6000,THK-10mm



SQUARE TANK
ITPL
MOC- CS
OD- 5200, L- 9500,
THK- 12mm



FORMALDEHYDE
Rajsha Chemicals
limited
Capacity- 100KL,
MOC- CS, OD- 3890,
H- 12200, THK- 08/10mm



METHANOL
Rajsha Chemicals Pvt limited
Capacity- 100KL, MOC- CS
OD- 4000, H- 8500, THK- 10mm



BENZENE
Bodal Chemicals Limited
Capacity- 213KL, MOC- CS
OD- 5000, L- 12200, THK- 10mm



HYDROGEN PEROXIDE

Gujarat Alkalies and Chemicals Limited
Capacity- 120KL, MOC- SS316 OD-5100,
L-6000,THK-10mm



SOLVENE STORAGE TANK

Biozar petrochemicals
Capacity- 30KL, MOC-
CS OD- 3000, L- 4500,
THK- 08/10mm

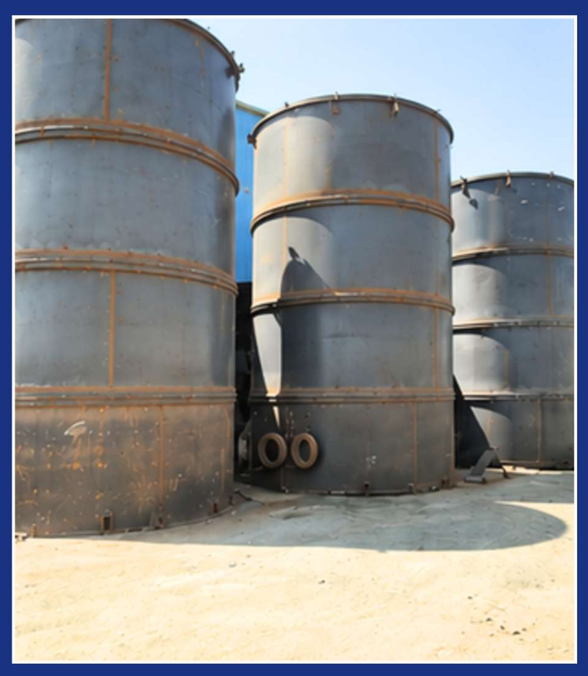

BIODIESEL

Fame Biofuels Pvt. Ltd.
Capacity- 150kl, MOC- CS
OD- 4500, L- 1000, THK-
10mm



TRANSFORMER OIL STORAGE TANK

Ather Industries Limited
Capacity- 100KL, MOC- CS OD- 2790,
H- 8250, THK- 10mm



CRUDE OIL STORAGE TANK (71 Tanks)

Oil and Natural Gas Authority Capacity-
45KL, MOC- CS
OD- 4500, H- 7000, THK- 10mm



HYDROGEN PEROXIDE

United Phosphorus Limited

Capacity- 200KL, MOC- MS OD-5200,
L-10,000,THK-10mm

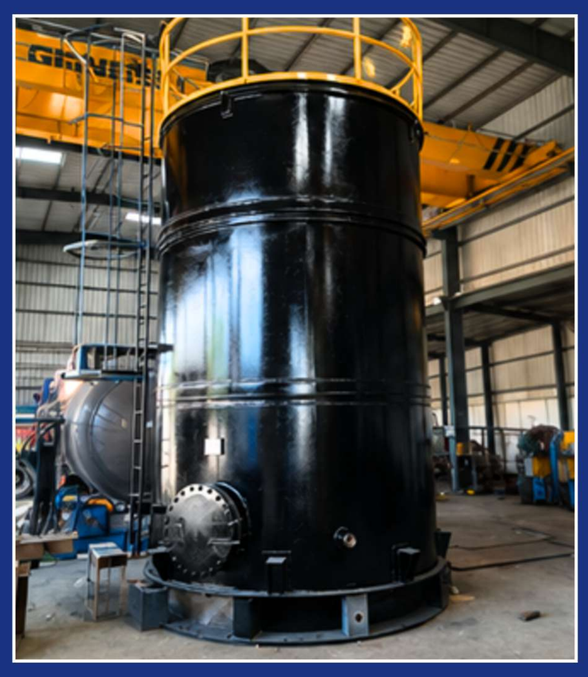

SOLVENT

Alchem Life
Science Pvt. Ltd.
Capacity- 50KL,
MOC- CS OD- 3500,
H- 5400, THK-
10mm



KETAMINE

Gujarat Alkaline and
Chemicals Ltd.
Capacity- 45KL,
MOC- CS OD- 3900,
L- 3800, THK-
06/08mm



PETROLEUM

Indian Oil Corporation Ltd.
Capacity- 20KL, MOC- CS
OD- 2100, H- 6250, THK- 06mm



RECEIVER TANK

Anupam Rasayan India Ltd
Capacity- 01KL, MOC- SS316
OD- 1000, L- 2000, THK- 08mm

PTFE PIPE AND VALVE DIVISION



LINED BUTTERFLY VLAVE



LINED CENTER SPLIT BALL VALVE



LINED SPOOL PIPE



PTFE LINED DIP PIPE



LINING ELBOW



LINED SIGHT FLOW INDICATOR

COMPANY PROFILE

ABOUT US

Agarwal Tanks & Allied Works (ATAW) is a Government-approved and PESO-licensed manufacturer specializing in Pressure Vessels, Process Equipment, Storage Tanks, PTFE-Lined Products, and Industrial Fabrication Solutions. With over 9 years of industry experience, we serve the Chemical, Petrochemical, Oil & Gas, Pharmaceutical, Fertilizer, Infrastructure, and Power sectors.

OUR PRODUCTS & SERVICES

* Pressure Vessels under SMPV Rules
* Storage Tanks & Process Reactors
* Heat Exchangers
* Distillation Columns
* Skid-Mounted Systems
* Site Fabricated Tanks
* Industrial Piping & Structural Fabrication
* PTFE/PFA/ETFE/Halar Lined Equipment & Fittings
* PESO Liaisoning & Regulatory Approvals

KEY STRENGTHS

* Complete Turnkey Solutions from Design to Commissioning
* Strong PESO Liaisoning & Compliance Expertise
* In-house Fabrication and PTFE Lining Facility
* Competitive Pricing with Customized Engineering Solutions
* Proven Track Record with Leading Industrial Clients

CONTACT US

Plot No 17, GIDC, Ranoli, Vadodara - 391 350

www.agarwaltanks.com info@agarwaltanks.com

+91 98980 36666

CERTIFIED ISO 45001:2018 COMPANY

CERTIFIED ISO 9001:2015 COMPANY

CERTIFIED ISO 14001:2015 COMPANY

GOVERNMENT OF INDIA PESO SAFETY FIRST • SINCE 1898

DHANRAJ GROUP
WHERE GENERATIONS WORK TOGETHER

DHANRAJ GROUP OF COMPANIES (M.I AGARWAL FAMILY)

AGARWAL D. GASSING STATION VADODARA

Agarwal ROADLINES

SANJIVANI INDUSTRIES

AL SIDDHI MANUFACTURING W.L.L

AUTOCRAFT

